SH06D

Product details

Size（mm）: 2460*2500*2560

SH08C

Main Functions

1. Free Squat rack * 1 set
2. Pull-up Tranining * 1set
3. 45° Climbing Training Station * 1 set
4. Rope Hook * 2 sets
5. Olympic bar placement area* 2 sets
6. Hanging Bar * 6 sets

Product details

Size（mm）: 2600*1650*2500

N.W.（kg）: 230KG(This weight does not include the Olympic bar and barbell. If you need, please purchase it separately.)

SH10A

Product details

Size（mm）： 2050*1680*2440

SH10

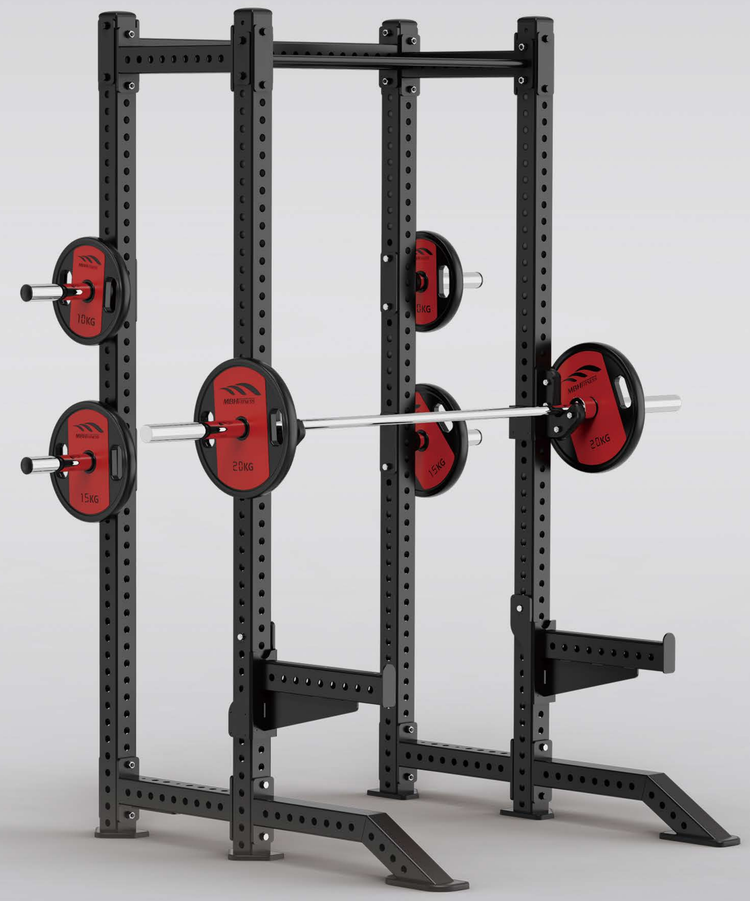

Product details

Size（mm）： 1900*1500*2450

SH03

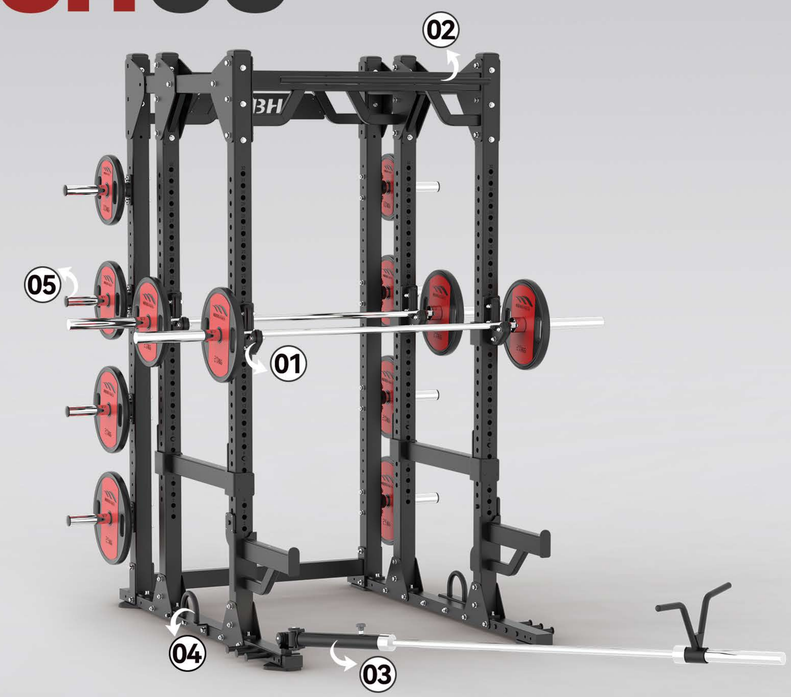

Main Functions

1. Free Squat rack * 2 sets
2. Pull-up Tranining * 1 set
3. Power rod *2 sets
4. Rope Hook * 2 sets
5. Hanging Bar * 8 sets

Product details

Size（mm）： 1885*1935*2525

N.W.（kg）： 350KG(This weight does not include the Olympic bar and barbell. If you need, please purchase it separately.)

SH04

Main Functions

1. Free Squat rack * 1 set
2. Barbell Rack * 1 set
3. Storage Rack * 3 sets
4. Pull-up Tranining * 6 sets

Product details

Size（mm）： 1250*1770*2415

N.W.（kg）： 255KG(This weight does not include the Olympic bar and barbell. If you need, please purchase it separately.)

SH04G

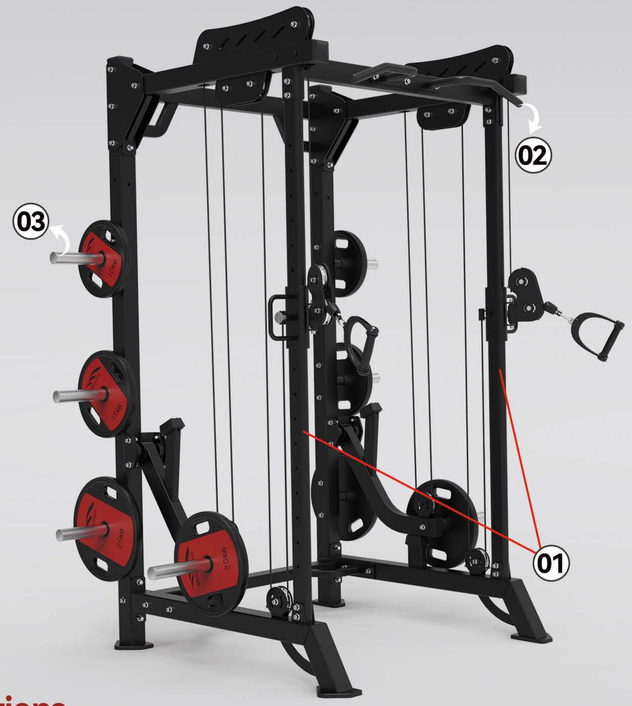

Main Functions

1. Crossover Cable
2. Pull-up Tranining * 1 set
3. Hanging Bar * 6 sets

Product details

Size（mm）： 1350*1890*2435

N.W.（kg）： 240KG(This weight does not include the Olympic bar and barbell. If you need, please purchase it separately.)

SH01A

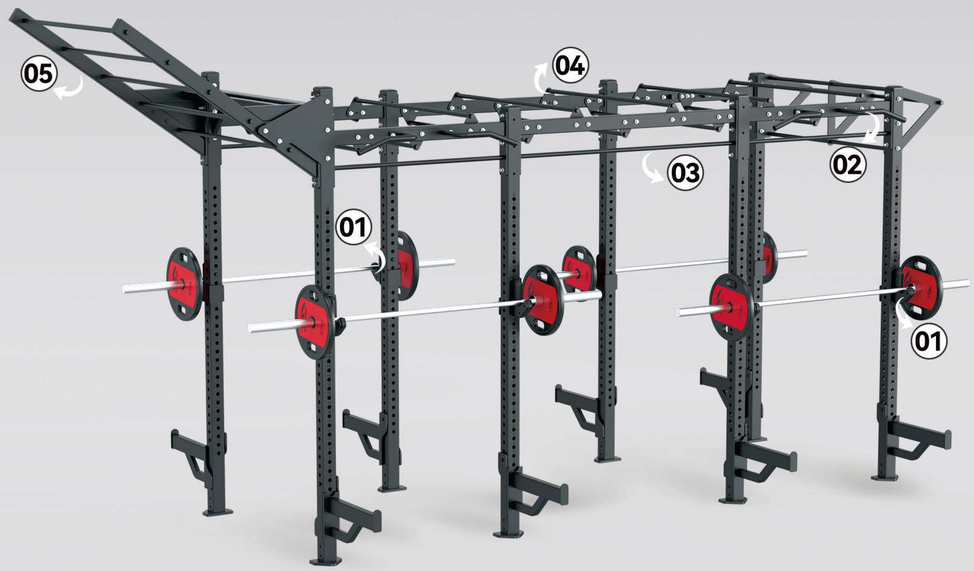

Main Functions

1. Free Squat rack * 4 sets
2. Pull-up Tranining * 4 sets
3. TRX Training* 7 sets
4. Climbing Training Station * 1 set
5. 45 ° Climbing Training Station * 1 set

Product details

Size（mm）： 5540*2480*2970

N.W.（kg）： 570KG(This weight does not include the Olympic bar and barbell. If you need, please purchase it separately.)

SH04D

Main Functions

1. Diving Platform * 1 set
2. Sandbag* 1 set
3. Dip Training * 1 set
4. Climbing Training Station * 1 set
5. Storage Rack * 6 sets
6. Ball target * 5 sets

Product details

Size（mm）： 6290*2030*2415

N.W.（kg）： 532KG(This weight does not include the Olympic bar and barbell. If you need, please purchase it separately.)

SH03D

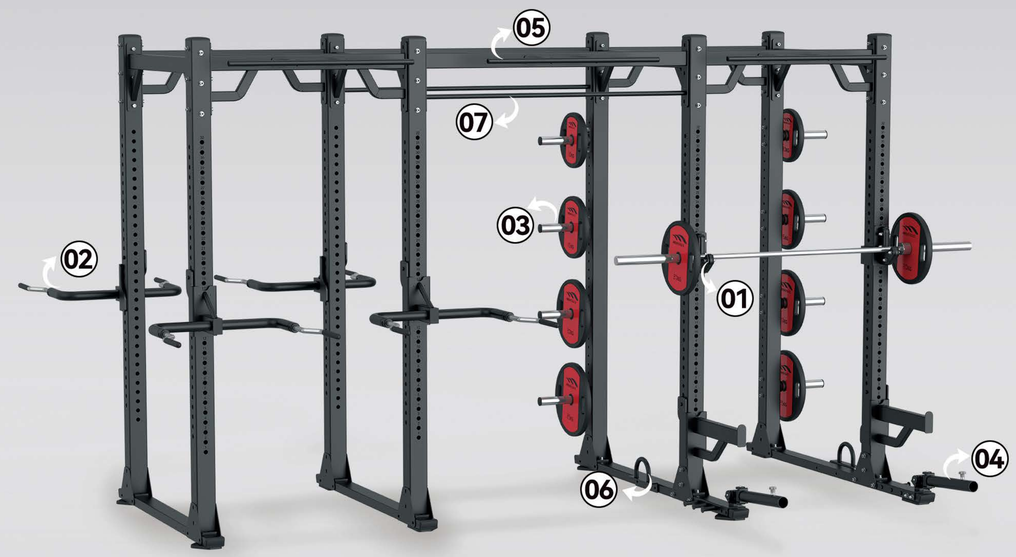

Main Functions

1. Free Squat rack * 1 set
2. Dip Training * 4 sets
3. Hanging Bar * 8 sets
4. Power rod *2 sets
5. Pull-up Tranining * 6 sets
6. Rope Hook * 2 sets
7. TRX Training* 2 Sets

Product details

Size（mm）： 4695*3005*2545

N.W.（kg）： 655KG(This weight does not include the Olympic bar and barbell. If you need, please purchase it separately.)

SH04A

Main Functions

1. Free Squat rack * 2 sets
2. Barbell Rack * 2 sets
3. Storage Rack* 6 sets
4. Pull-up Tranining * 2 sets

Product details

Size（mm）: 4012*1770*2415

N.W.（kg）: 550KG(This weight does not include the Olympic bar and barbell. If you need, please purchase it separately.)

SH01

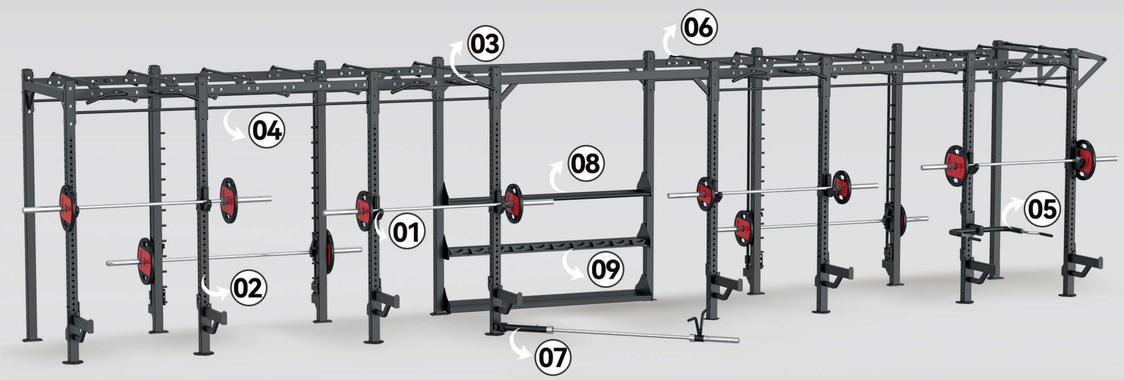

Main Functions

1. Free Squat rack * 4 sets
2. Smith Train * 2 sets
3. Pull-up Tranining * 8 sets
4. TRX Training* 13 sets
5. Dip Train* 1 set
6. Climbing Training Station *2 sets
7. Power rod * 1 set
8. Storage Rack * 2 sets
9. Dumbbell Rack * 1 set

Product details

Size（mm）: 10490*2455*2435

N.W.（kg）: 1045KG(This weight does not include the Olympic bar and barbell. If you need, please purchase it separately.)

SH03A

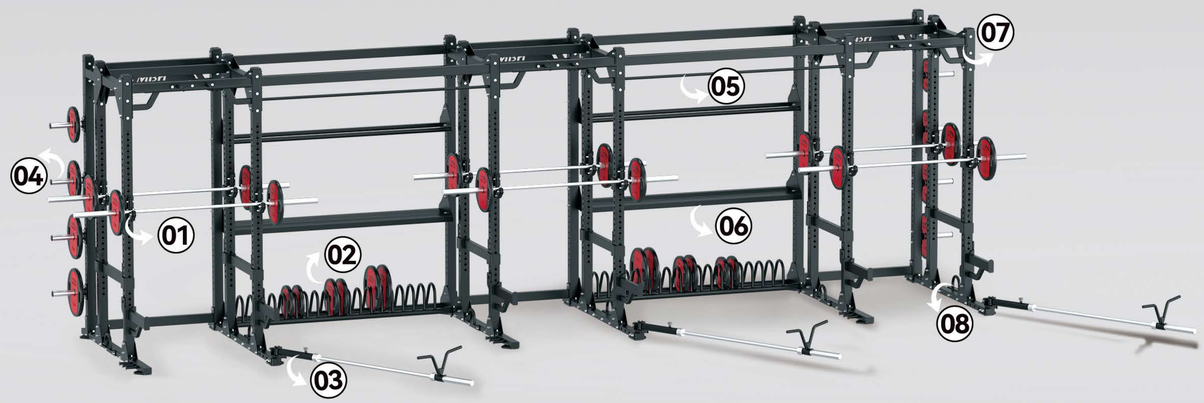

Main Functions

1. Free Squat rack * 6 sets
2. Barbell Rack * 2 sets
3. Power rod *3 sets
4. Hanging Bar * 8 sets
5. TRX Training* 2 sets
6. Storage Rack *4 sets
7. Pull-up Tranining * 3 sets
8. Rope Hook * 6 sets

Product details

Size（mm）： 8600*1935*2525

N.W.（kg）： 1155KG(This weight does not include the Olympic bar and barbell. If you need, please purchase it separately.)

SH04E

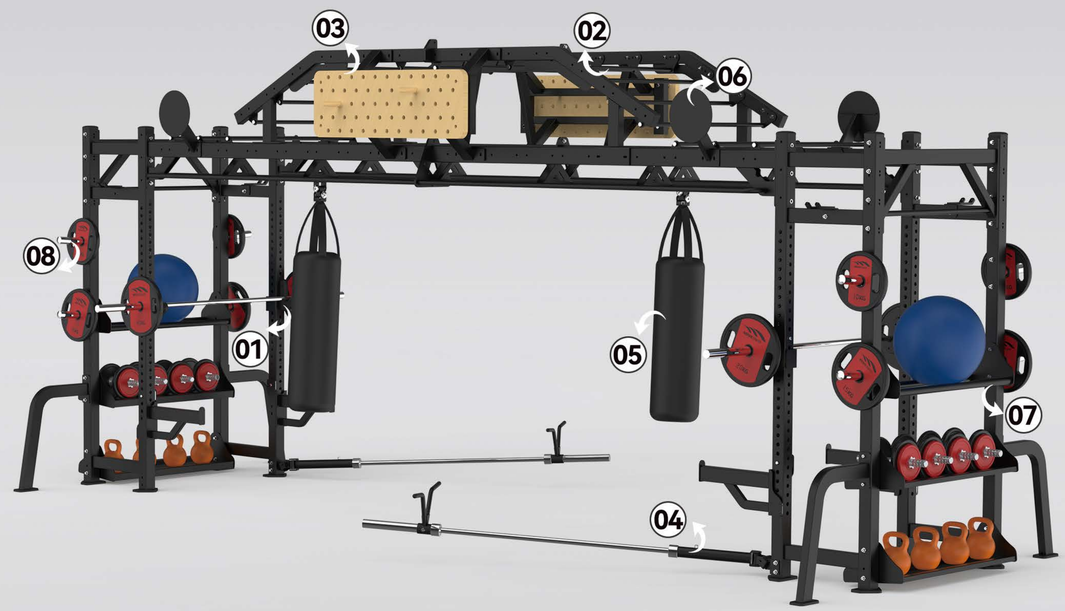

Main Functions

1. Free Squat rack * 2 sets
2. Ladder* 1 set
3. Rock-climbing Rack * 2 sets
4. Barbell Rack * 2 sets
5. Sandbag* 2 sets
6. Ball target * 4 sets
7. Storage Rack * 6 sets
8. Hanging Bar * 12 sets

Product details

Size（mm）： 6920*2550*2980

N.W.（kg）： 780KG(This weight does not include the Olympic bar and barbell. If you need, please purchase it separately.)

SH04H

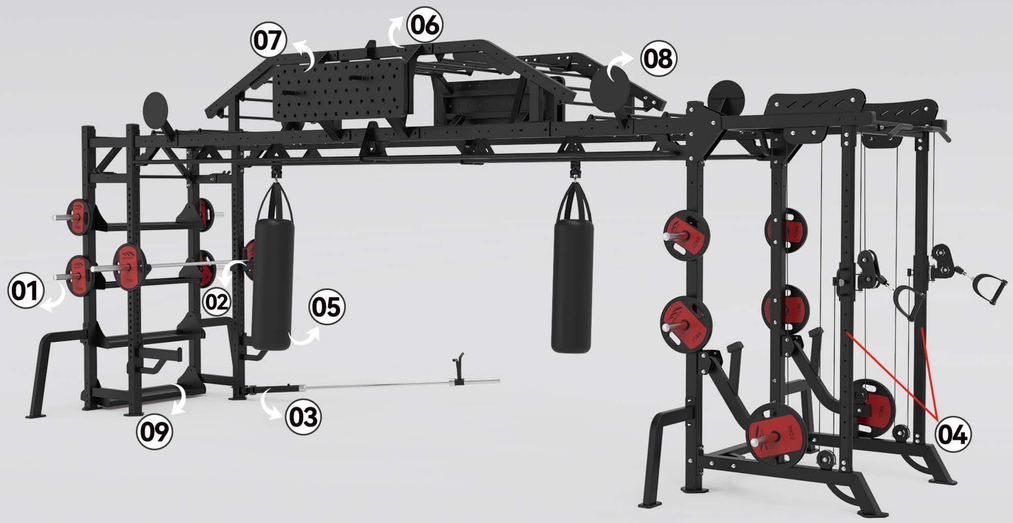

Main Functions

1. Hanging Bar * 8 sets
2. Free Squat rack * 1 set
3. Barbell Rack * 1 set
4. Crossover Cable
5. Sandbag* 2 sets
6. Ladder* 1 set
7. Rock-climbing Rack * 2 sets
8. Ball target * 4 sets
9. Storage Rack * 4 sets

Product details

Size（mm）： 7500*2550*2980

N.W.（kg）： 845KG(This weight does not include the Olympic bar and barbell. If you need, please purchase it separately.)

SH04C

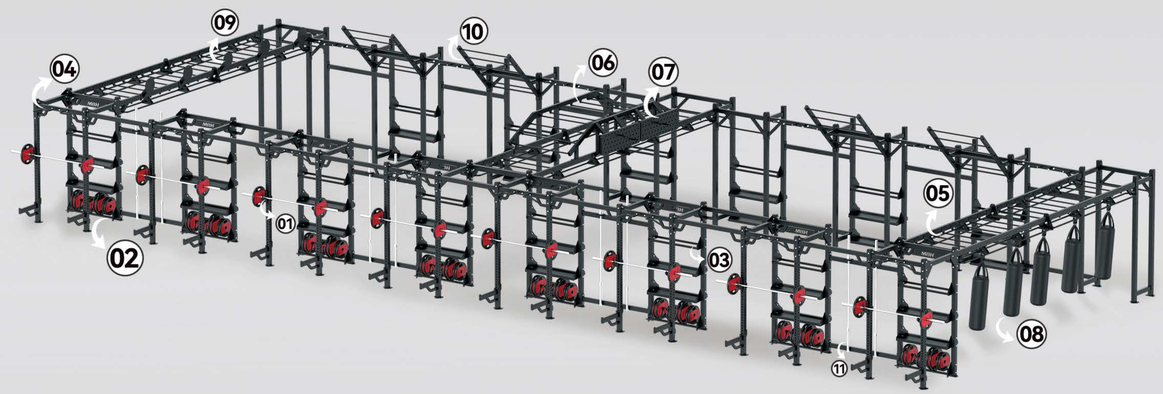

Main Functions

1. Free Squat rack * 8 sets
2. Barbell Rack * 8 sets
3. Storage Rack * 42 sets
4. Pull-up Tranining * 20 sets
5. Climbing Training Station * 2 sets
6. Ladder* 1 set
7. Rock-climbing Rack * 1 set
8. Sandbag* 5 sets
9. Ball target * 5 sets
10. 45° Climbing Training Station * 4 sets
11. Power rod * 2 sets

Product details

Size（mm）： 20475*8460*2960

N.W.（kg）： 4800KG(This weight does not include the Olympic bar and barbell. If you need, please purchase it separately.)